REV	DESCRIPTION	DATE

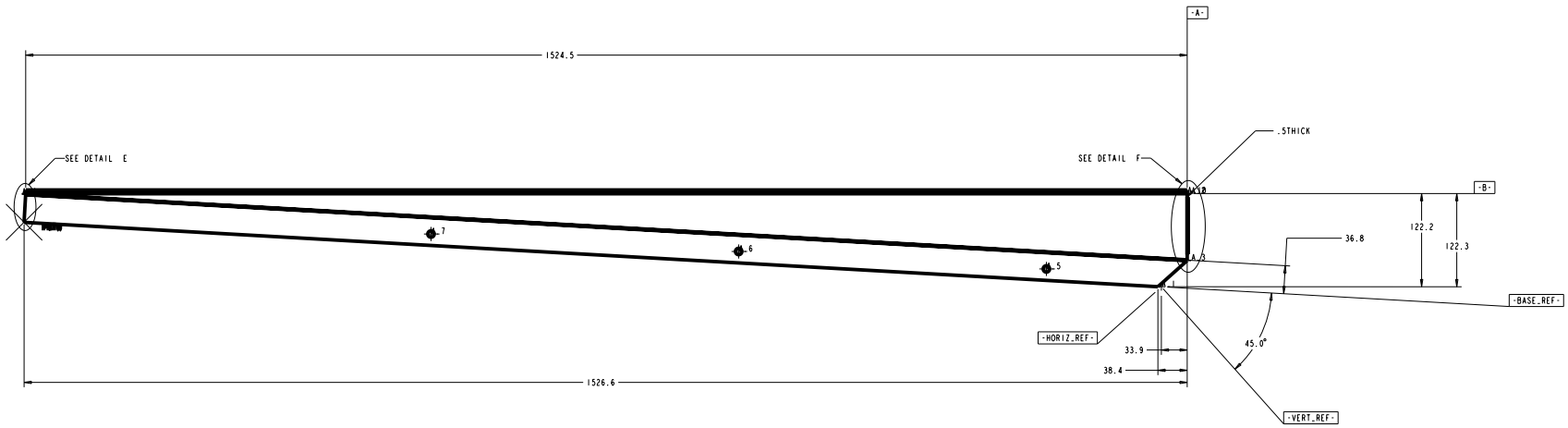

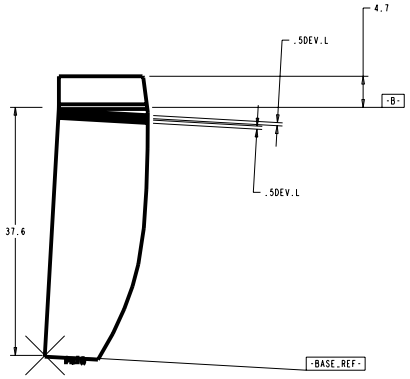

DETAIL E
SCALE 4.0

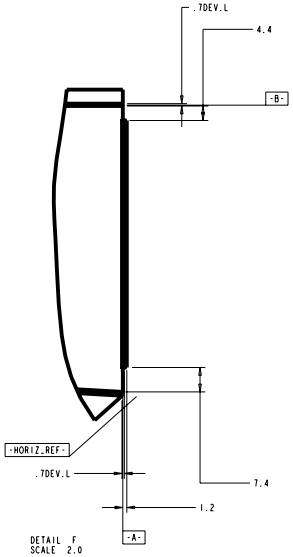

DETAIL F
SCALE 2.0

TOLERANCES		ORIGINATOR	T. R. Chase	20-Mar-00
.X	±0.2	DRAWN BY	T. R. Chase	20-Mar-00
.XX	±0.05	CHECKED		
.XXX	±0.005	APPROVED		
ANGLES	±0.5	USED ON: 45 deg modules, types A & B		

Main Injector Neutrino Oscillation Search

UNIVERSITY OF MINNESOTA

45 Deg Manifold Cover, Front, Right Hand (Flat Pattern)

Model Type:	Model File Name:	Drawing File Name:
PART	COVER_45_FRONT_RH	COVER_45_FRONT_RH
Scale: 0.500:1	Drawing Number: 2.2.3	Revision / Sheet: 2 of 2

Finish

All dimensions are in mm unless specified otherwise