REV	DESCRIPTION	DATE

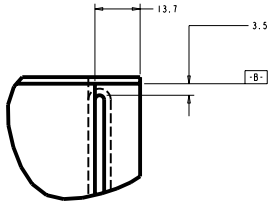

DETAIL B
SCALE 2.000

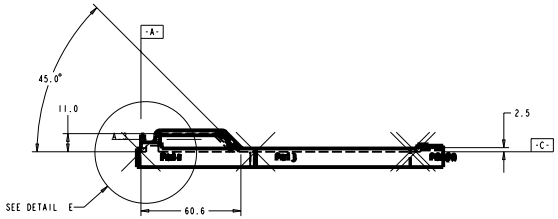

SECTION A-A

SECTION C-C

SECTION B-B

SECTION D-D

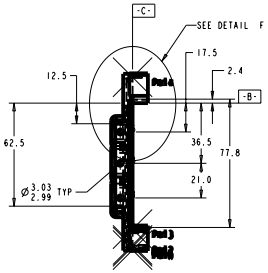

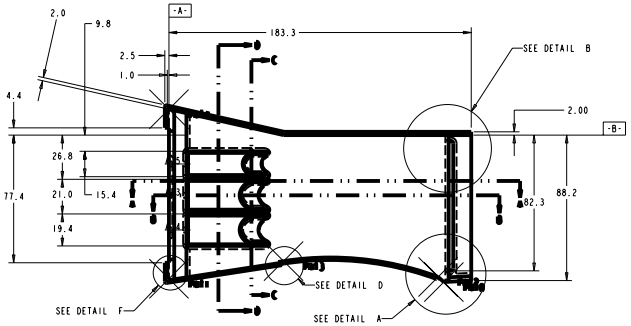

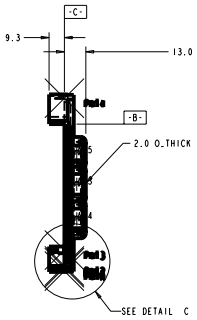

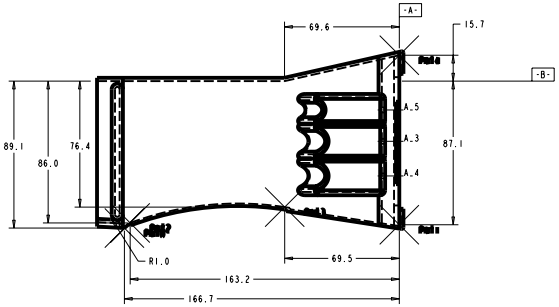

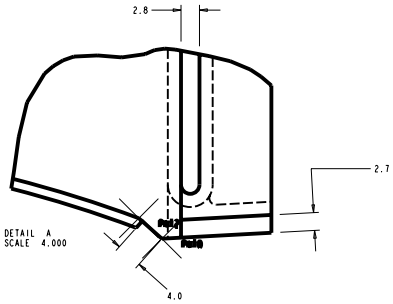

DETAIL A
SCALE 4.000

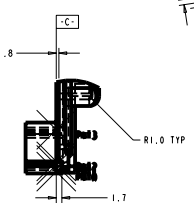

DETAIL C
SCALE 2.000

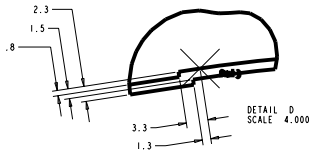

DETAIL D
SCALE 4.000

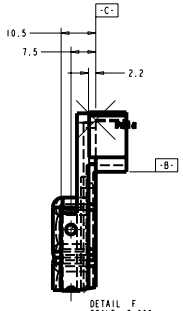

DETAIL F
SCALE 2.000

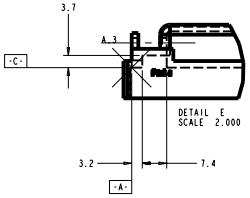

DETAIL E
SCALE 2.000

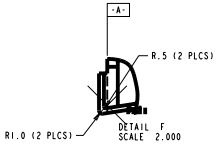

DETAIL F
SCALE 2.000

NOTES
1 MATERIAL: OPAQUE BLACK NORYL, GRADE N190X OR N225X, OR EQUIVALENT
2 DO NOT USE MOLD RELEASE
3 LEFT HAND PART IS MIRROR IMAGE ABOUT DATUM -A-
4 NO MEASURABLE WARPAGE
5 MATERIAL REGRIND NOT TO EXCEED SUPPLIER RECOMMENDATIONS
6 NOMINAL PART THICKNESS: 2 MM
7 PRODUCTION QUANTITIES: 2285 - RIGHT HAND; 2285 - LEFT HAND

TOLERANCES		ORIGINATOR	T. R. Chase	21-Mar-00
.X	±0.1	DRAWN BY	T. R. Chase	21-Mar-00
.XX	±0.02	CHECKED		
.XXX	±0.005	APPROVED		
ANGLES	±0.5	USED ON: 45 deg modules, types A & B		

Main Injector Neutrino Oscillation Search

UNIVERSITY OF MINNESOTA

Light Injection Manifold, 45 Deg, Right Hand

Model Type: PART	Model File Name: LT_INJ_MANIF_45_RH_IM	Drawing File Name: LT_INJ_MANIF_45_RH_IM
Scale 1.000:1	Drawing Number 2.2.3	Revision / Sheet 1 of 2

Finish

All dimensions are in mm unless specified otherwise