REV	DESCRIPTION	DATE

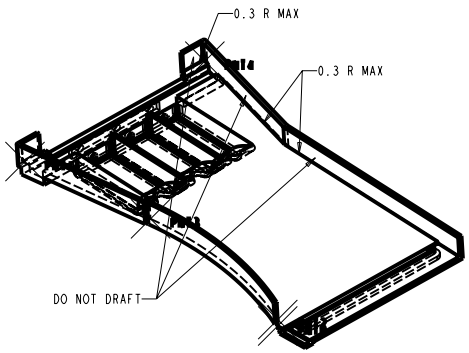

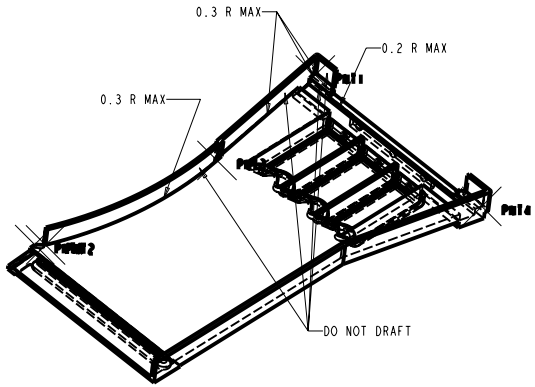

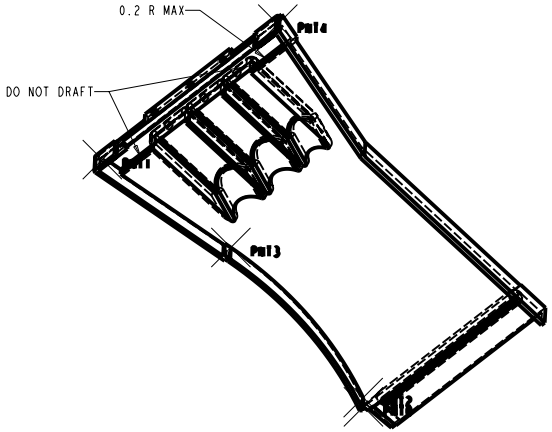

TOLERANCES	ORIGINATOR	T. R. Chase	26-Jun-00
.X ±0.1	DRAWN BY	T. R. Chase	26-Jun-00
.XX ±0.02	CHECKED		
.XXX ±0.005	APPROVED		
ANGLES ±0.5	USED ON: 45 deg modules, types A & B		

Main Injector Neutrino Oscillation Search

University of Minnesota

Light Injection Manifold, 45 Deg, Right Hand

Finish	Model Type: PART	Model File Name: LT_INJ_MANIF_45_RH_IM	Drawing File Name: LT_INJ_MANIF_45_RH_IM
	Scale 1.000:1	Drawing Number 2.2.3	Revision / Sheet 2 of 2
	All dimensions are in mm unless specified otherwise		