REV	DESCRIPTION	DATE

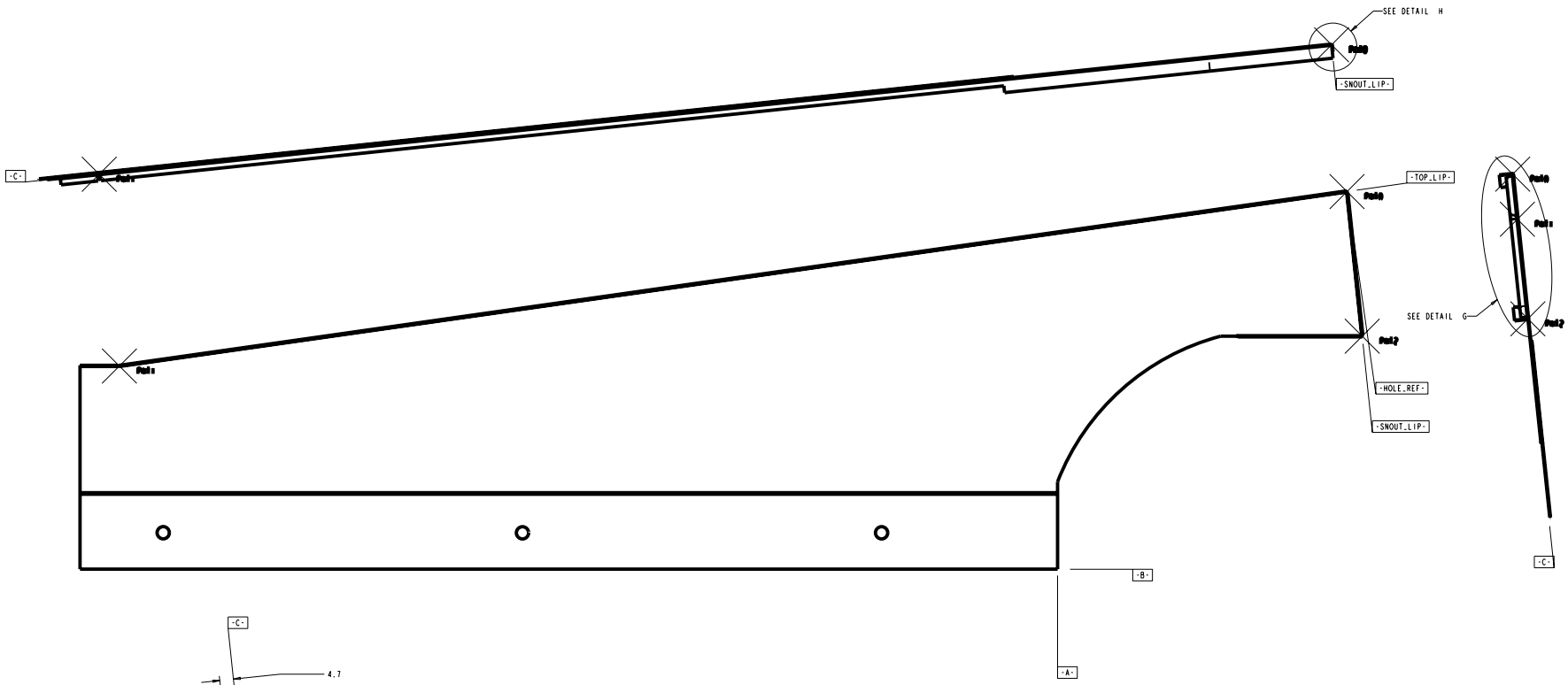

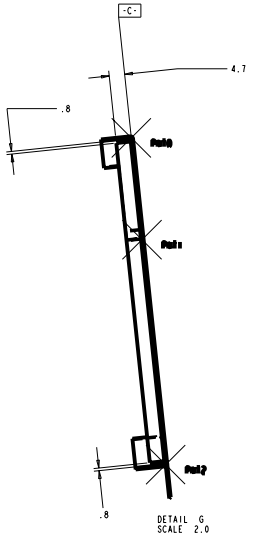

DETAIL G
SCALE 2.0

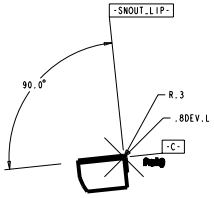

DETAIL H
SCALE 2.0

TOLERANCES		ORIGINATOR	T. R. Chase	25-Feb-00
.X	±0.2	DRAWN BY	T. R. Chase	25-Feb-00
.XX	±0.05	CHECKED		
.XXX	±0.005	APPROVED		
ANGLES	±0.5	USED ON: Perpendicular modules, types E & F		

Main Injector Neutrino Oscillation Search

UNIVERSITY OF MINNESOTA

Perpendicular Manifold Cover, Side Out Snout, Back, Right Hand

Model Type:	Model File Name:	Drawing File Name:
PART	COVER_PERP_SIDE_BACK_RH	COVER_PERP_SIDE_BACK_RH
Scale: 1.000:1	Drawing Number: 2.2.3.1.4.5	Revision: Sheet 4 of 6

Finish

All dimensions are in mm unless specified otherwise