REV	DESCRIPTION	DATE

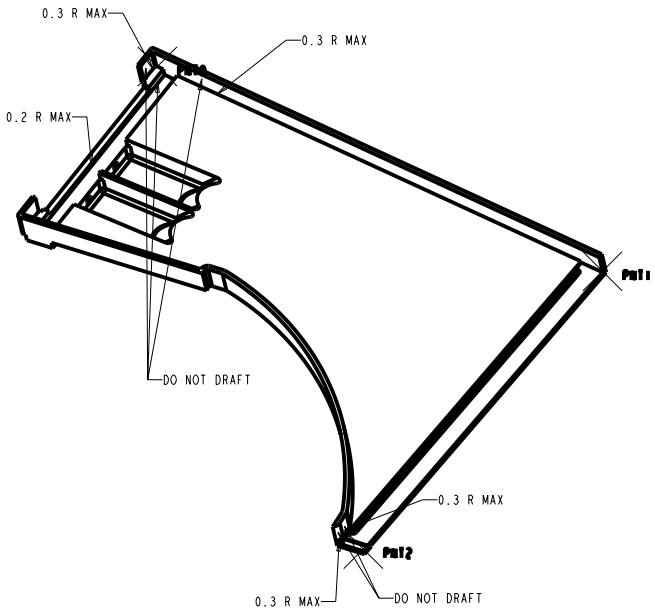

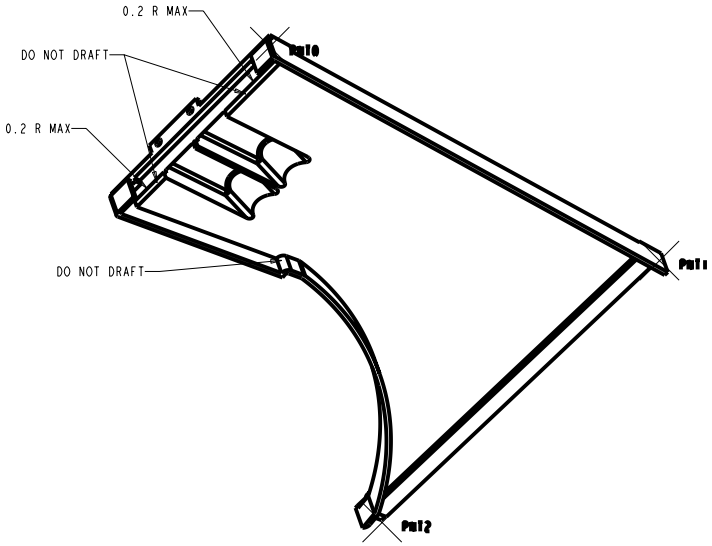

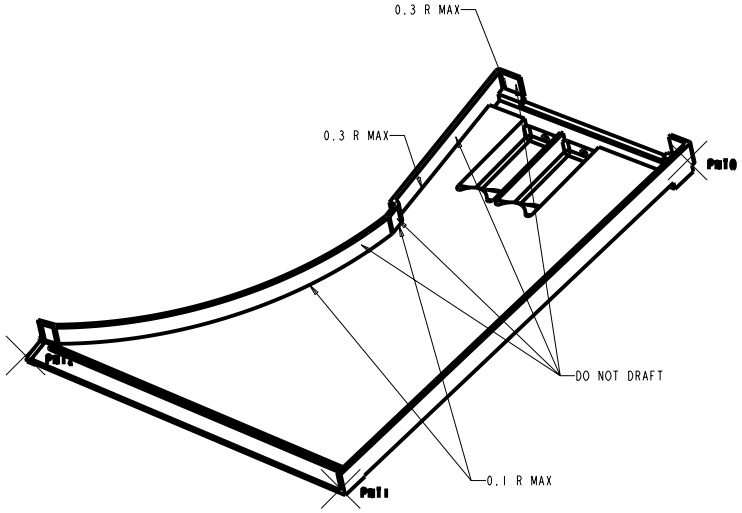

TOLERANCES		ORIGINATOR	T. R. Chase	27-Jun-00
.X	±0.1	DRAWN BY	T. R. Chase	27-Jun-00
.XX	±0.02	CHECKED		
.XXX	±0.005	APPROVED		
ANGLES	±0.5	USED ON: Perpendicular modules, types E & F		

Main Injector Neutrino Oscillation Search

University of Minnesota

Light Injection Manifold, Perpendicular Side Out Snout, Right Hand

Finish	Model Type: PART	Model File Name: LT_INJ_MANIF_PERP_SIDE_RH_IM	Drawing File Name: LT_INJ_MANIF_PERP_SIDE_RH_IM
	Scale 1.000:1	Drawing Number 2.2.3.1.1.4.4	Revision / Sheet 2 of 2
	All dimensions are in mm unless specified otherwise		