REV	DESCRIPTION	DATE

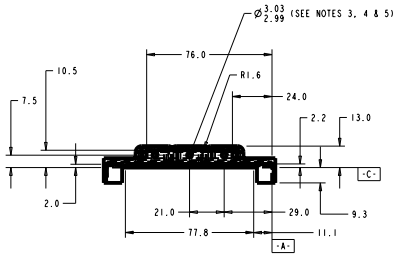

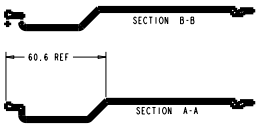

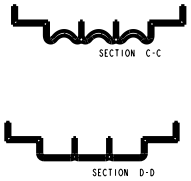

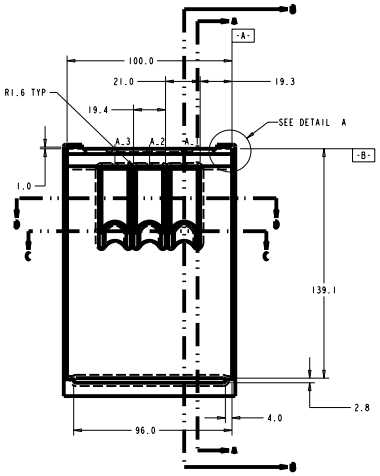

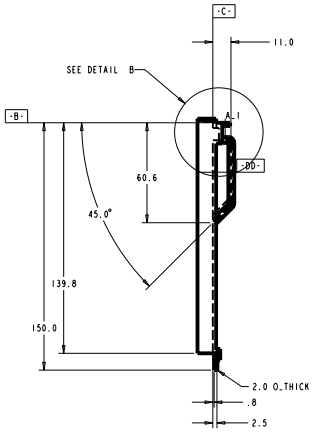

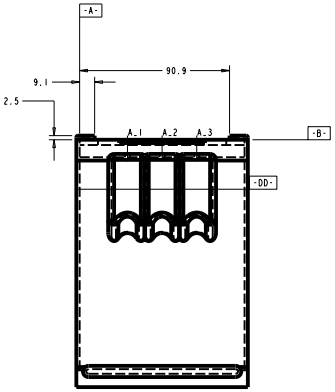

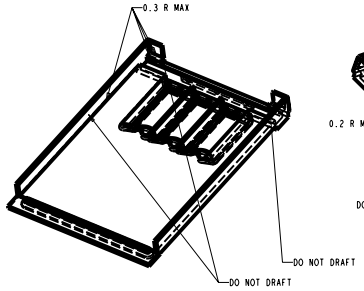

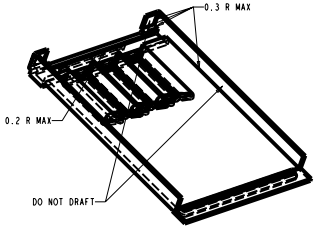

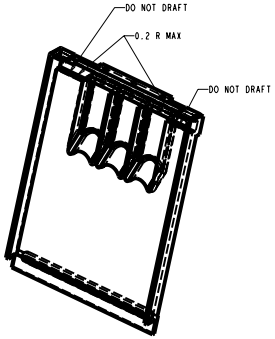

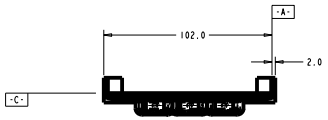

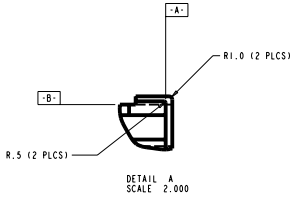

DETAIL A
SCALE 2.000

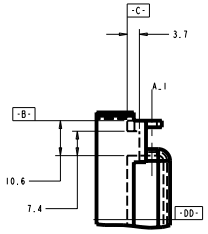

DETAIL B
SCALE 2.000

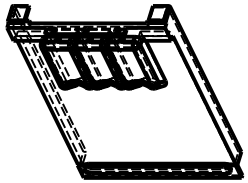

NOTES	
1	MATERIAL: BLACK NORYL, GRADE N190X OR N225X, OR EQUIVALENT
2	DO NOT USE MOLD RELEASE
3	RIGHT HAND PART: DRILL HOLES AT AXES A2 & A3
4	LEFT HAND PART: DRILL HOLES AT AXES A1 & A2
5	CALIBRATION MODULE PART: DRILL HOLES AT AXES A1, A2 & A3
6	NO MEASURABLE WARPAGE
7	MATERIAL REGRIND NOT TO EXCEED SUPPLIER RECOMMENDATIONS
8	NOMINAL PART THICKNESS: 2 MM
9	PRODUCTION QUANTITIES: 1250 - RIGHT HAND; 1250 - LEFT HAND; 170 - CALIBRATION MODULE

TOLERANCES		ORIGINATOR	T. R. Chase	06-Jun-00
.X	±0.1	DRAWN BY	T. R. Chase	06-Jun-00
.XX	±0.02	CHECKED		
.XXX	±0.005	APPROVED		
ANGLES	±0.5	USED ON: Module Types C, D, E & F		

Main Injector Neutrino Oscillation Search

UNIVERSITY OF MINNESOTA

Light Injection Manifold, Perpendicular, Straight Out Snout

Model Type:	Model File Name:	Drawing File Name:
PART	LT_INJ_MANIF_PERP_ST_IM	LT_INJ_MANIF_PERP_ST_IM
Scale: 1.000:1	Drawing Number: 2.2.3	Revision: Sheet: 1 of 1

Finish

All dimensions are in mm unless specified otherwise