REV	DESCRIPTION	DATE
1	NOTES 2-5 ADDED; CRITICAL MATING SURFACES MARKED	3/24/00

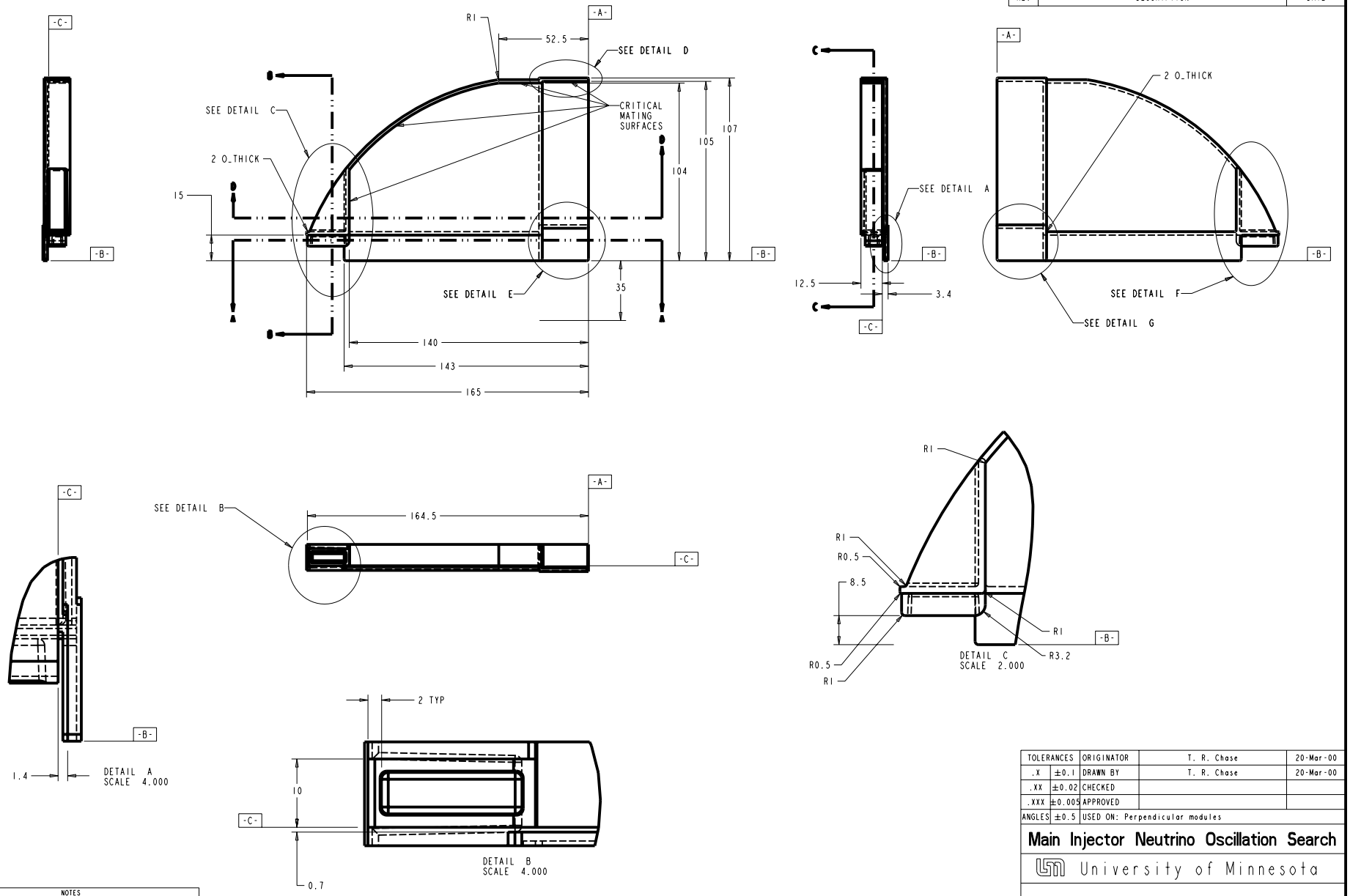

NOTES	
1	MATERIAL: BLACK NORYL, GRADE N190X OR N225X, OR EQUIVALENT
2	DO NOT USE MOLD RELEASE
3	NO MEASURABLE WARPAGE
4	NO VISIBLE CONTAMINANTS WITH PART HELD AT 50 CM
5	MATERIAL REGRIND NOT TO EXCEED SUPPLIER RECOMMENDATIONS
6	QUANTITY: 4800 PARTS

TOLERANCES		ORIGINATOR	T. R. Chase	20-Mar-00
.X	±0.1	DRAWN BY	T. R. Chase	20-Mar-00
.XX	±0.02	CHECKED		
.XXX	±0.005	APPROVED		
ANGLES	±0.5	USED ON: Perpendicular modules		

Main Injector Neutrino Oscillation Search

University of Minnesota

Perpendicular Module Variable Width Seal, Back (Injection Molded)

Model Type:	Model File Name:	Drawing File Name:
PART	VW_SEAL_PERP_BACK_IM	VW_SEAL_PERP_BACK_IM
Scale: 1.000:1	Drawing Number: 2.2.3	Revision / Sheet: 1 of 2

Finish

All dimensions are in mm unless specified otherwise