REV	DESCRIPTION	DATE

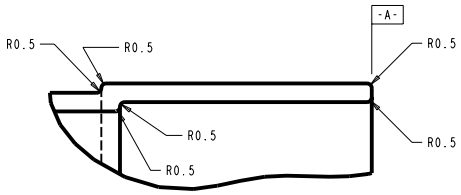

DETAIL D
SCALE 4.000

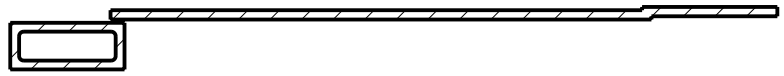

SECTION A-A
SCALE 2.000

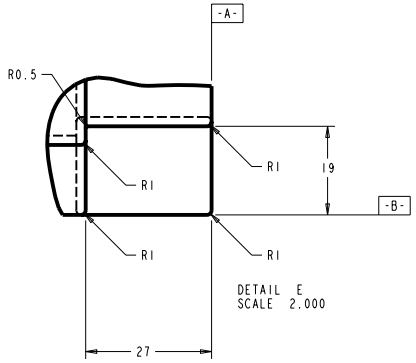

DETAIL E
SCALE 2.000

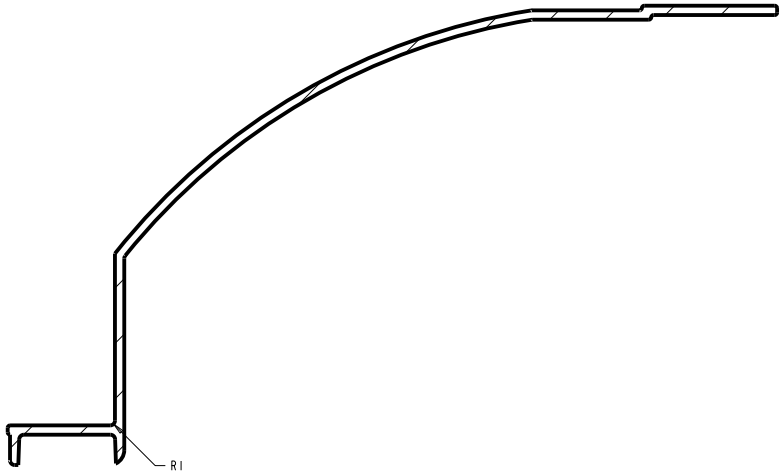

SECTION C-C
SCALE 2.000

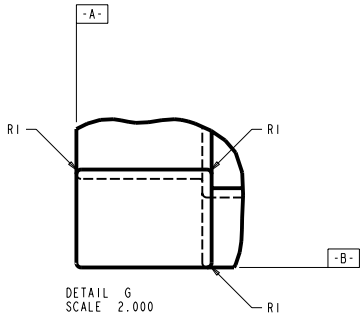

DETAIL G
SCALE 2.000

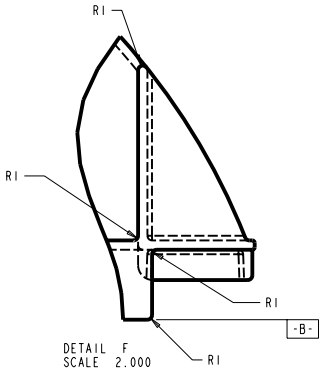

DETAIL F
SCALE 2.000

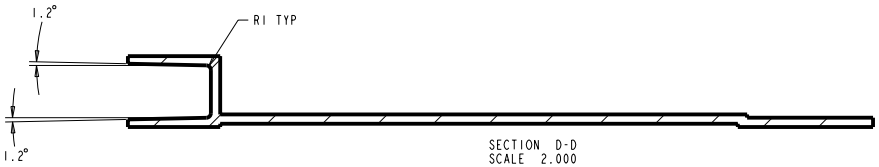

SECTION D-D
SCALE 2.000

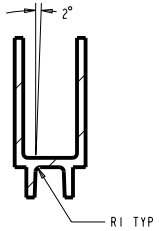

SECTION B-B
SCALE 2.000

TOLERANCES		ORIGINATOR	T. R. Chase	20-Feb-00
.X	±0.1	DRAWN BY	T. R. Chase	20-Feb-00
.XX	±0.02	CHECKED		
.XXX	±0.005	APPROVED		
ANGLES	±0.5	USED ON: Perpendicular modules		

Main Injector Neutrino Oscillation Search

University of Minnesota

Perpendicular Module Variable Width Seal, Back (Injection Molded)

Model Type:	Model File Name:	Drawing File Name:
PART	VW_SEAL_PERP_BACK_IM	VW_SEAL_PERP_BACK_IM
Scale: 1.000:1	Drawing Number: 2.2.3	Revision / Sheet: 2 of 2

Finish

All dimensions are in mm unless specified otherwise