REV	DESCRIPTION	DATE

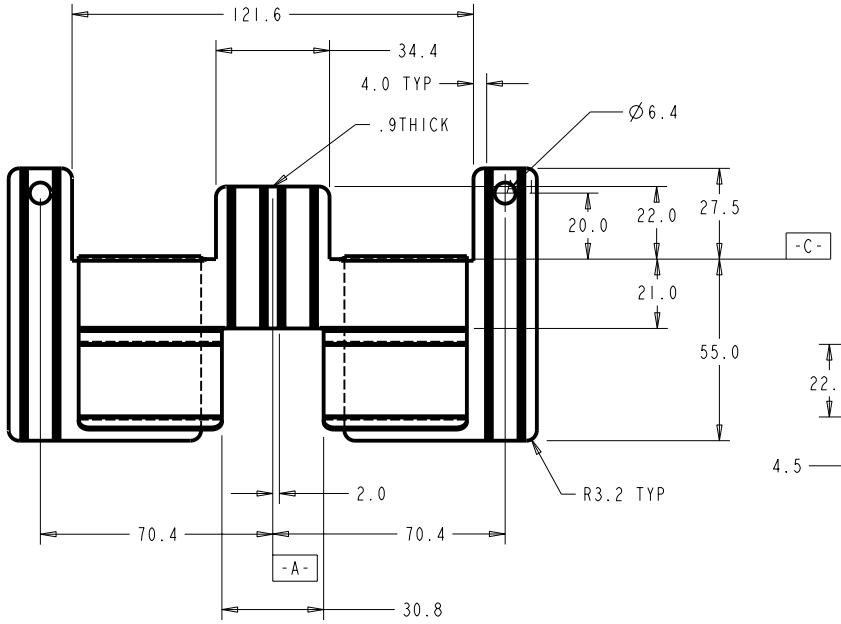

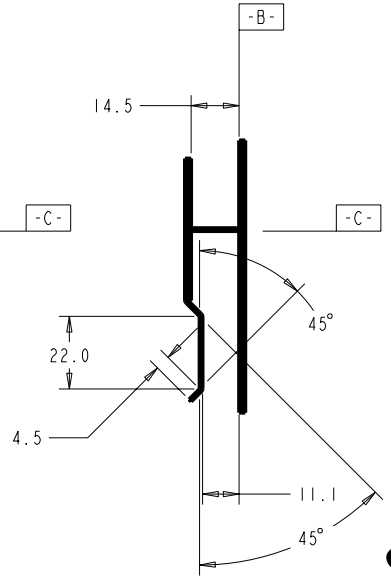

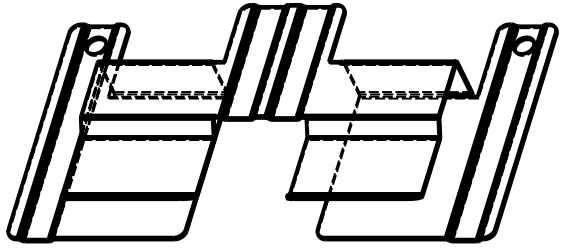

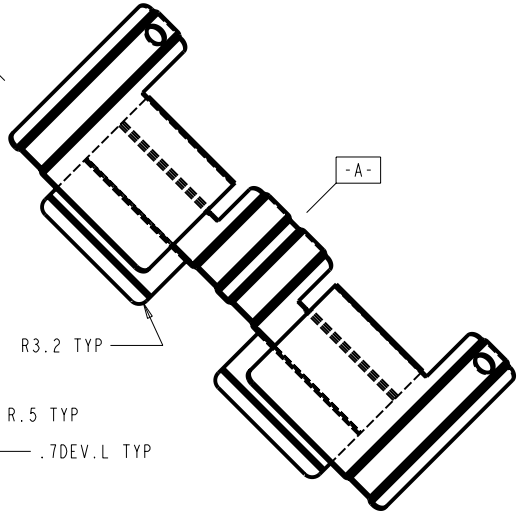

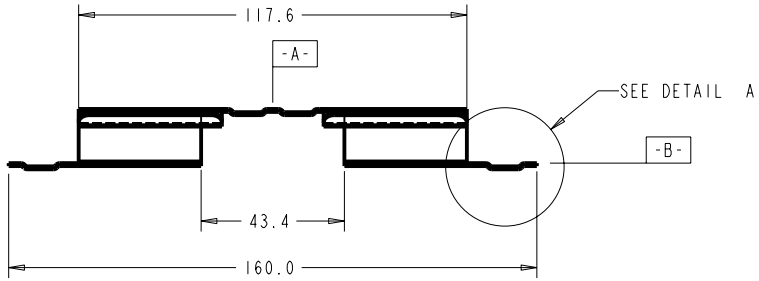

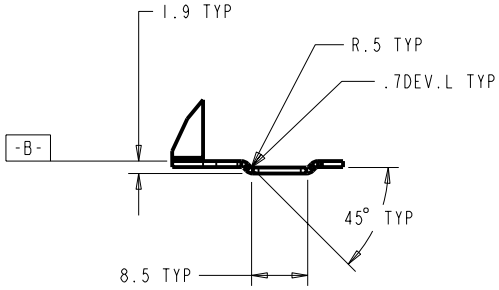

DETAIL A
SCALE 2.000

TOLERANCES		ORIGINATOR	T. R. Chase	24-Mar-00
.X	±0.3	DRAWN BY	T. R. Chase	24-Mar-00
.XX	±0.05	CHECKED		
.XXX	±0.005	APPROVED		
ANGLES	±0.5	USED ON: All scintillator modules		

Main Injector Neutrino Oscillation Search

UNIVERSITY OF MINNESOTA

Module Mounting Clip

Finish	Model Type: PART	Model File Name: MODULE_MOUNT	Drawing File Name: MODULE_MOUNT
	Scale 1.000:1	Drawing Number 2.2.3	Revision / Sheet 1 of 2
	All dimensions are in mm unless specified otherwise		

NOTES	
1	MATERIAL: 20 GAGE SHEET STEEL
2	PRODUCTION QUANTITY: 39,000